Fertiliser Spreaders

SNG / SNGR460 & 660

Operators Manual

Reese Engineering Ltd
Aitchison Industries

Palmerston North, New Zealand
Telephone: +64 6 357 9323
Facsimile: +64 6 354 3155
www.reeseagri.com

CONTENTS

1. OWNER INFORMATION 1-1

2. TECHNICAL SPECIFICATIONS 2-1

2.1. ORDERING SPARE PARTS: 2-1
2.2. RIGHT HAND AND LEFT HAND: 2-1
2.3. TAKING DELIVERY: 2-1

3. SAFETY FIRST 3-1

4. ATTACHING YOUR SPREADER TO AN ATV 4-1

5. ADJUSTING THE SPREADING RATE 5-1

5.1. APERTURE SETTING LEVER 5-1
5.2. OPERATING HANDLE 5-1

6. OTHER PECULIARITIES OF SPREADING 6-1

6.1. GRAIN 6-1
6.2. GRASS SEEDS 6-1
6.3. SMALL SEEDS 6-1
6.4. FORWARD SPEED OF A.T.V 6-1
6.5. DOUBLE SOWING 6-2
6.6. WIDTH 6-2
6.7. ENGAGING ôRôCLUTCH 6-2
6.8. FERTILISER SETTLING 6-3
6.9. DRIVING CLOCKWISE/ANTICLOCKWISE AROUND THE FIELD. 6-3
6.10. DRIVING óTO-AND-FROôACROSS THE FIELD 6-3
6.11. REPOSITIONING THE SPINNING DISC FINS FOR AN EVEN SPREAD 6-4

7. MAINTENANCE 7-1

7.1. RIGHT ANGLED GEARBOX 7-1
7.2. REMOVAL OF HOPPER 7-1
7.3. WHEEL BEARINGS 7-1
7.4. LUBRICATION OF CLUTCH BUSH 7-1
7.5. CLEANING AFTER USE 7-1

8. SEED SPREADING GUIDE 8-1

9. FERTILISER SPREADING GUIDE 9-1

10. SEED AND FERTILISER SPREADING GUIDE 10-1

11. TRAILED SPREADER – PARTS LIST 11-1

12. TRAILED SPREADER – PARTS LIST 12-1

13. CLUTCH ASSEMBLY – PARTS LIST 13-2

1. OWNER INFORMATION

Congratulations on the purchase of your new Agri-Spred.

The Agri-Spred range of fertiliser spreaders has been designed and manufactured with the discerning farmer in mind. Having regarded ever-increasing costs of farm machinery today, our company has attempted to provide long-term durability by using the finest materials in the construction of the spreaders.

This manual deals with the assembly, calibration, use and maintenance of our complete range of spreader models. Read it thoroughly before attempting to use your spreader. If you are still unsure about any aspect of the spreader, ask the dealer who supplied the machine to explain any unclear points.

Your Aitchison Dealer is:

Name é

Address é

é é

Phone No é

Date Machine Purchased é é é é é é é é é é é é é é é é é é é ..

Model No é

Serial No é

2. TECHNICAL SPECIFICATIONS

Model	***SNG / SNGR460***	***SNG / SNGR 660***
Type	Gear Drive	Gear Drive
Capacity	460 litres	660 litres
Height	1.44m	1.59m
Width	1.49m	1.49m
Weight	150kg	155kg
Wheel	18 x 8.5 x 8	18 x 8.5 x 8

Distributes: All fertiliser as well as semi-organic fertiliser

Seeds: Grass seeds, Barley, Oats and Maize

Width of Spread: (max)

Granulated fertilisers ~ 18 metres (59 ft.)
Crystalline fertilisers ~ 15 metres (49 ft.)
Powdered fertiliser ~ 12 metres (39 ft.)

Application Rate: From 15kg to 500kg per hectare

2.1. Ordering Spare Parts:

Always use the Aitchison Part No. and description as given in the parts manual. Please include:

- Quantity required
- Machine Size
- Model No
- Machine Serial No

The Serial No. can be found on a plate on the frame of your Agri-Spred.

2.2. Right Hand and Left hand:

Reference in this manual to right hand and left hand is taken by viewing the machine from behind and in the direction of travel.

2.3. Taking Delivery:

Carefully check for any damage that may have occurred during transit, and if necessary, ensure that a claim is lodged with the common carrier concerned prior to accepting delivery.

3. SAFETY FIRST

FOLLOW SAFETY INSTRUCTIONS

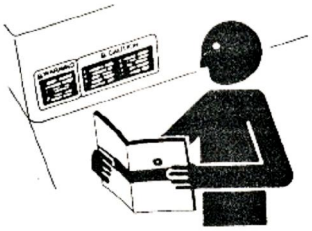

Carefully read all safety messages in this manual and on your machine safety signs. Replace missing or damaged safety signs, these can be ordered from your local Aitchison dealer.

Learn how to operate the machine and how to use controls properly. Do not let anyone operate it without instruction.

Keep your machine in proper working condition. Unauthorized modifications to the machine may impair the function and/or safety and affect machine life.

If you do not understand any part of this manual and need assistance, contact your Aitchisonôs dealer.

OPERATE YOUR MACHINE SAFELY

Be careful when operating machine to avoid injury.

Serious injury or death can result from contact with electric lines. Use care when moving or operating the machine near electric lines to avoid contact.

Be careful when operating on hillsides, tractor can tip sideways if it strikes a hole, ditch or other irregularity.

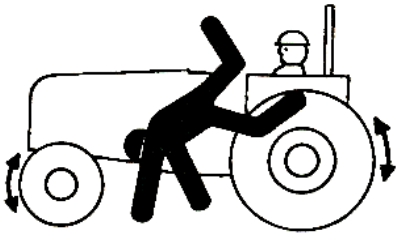

Permit only one person, the operator, on tractor platform while tractor and planter are in operation. Keep riders off. They are subject to injury such as being struck by foreign object and being thrown off the machine. They also obstruct the operators view.

WEAR PROTECTIVE GEAR

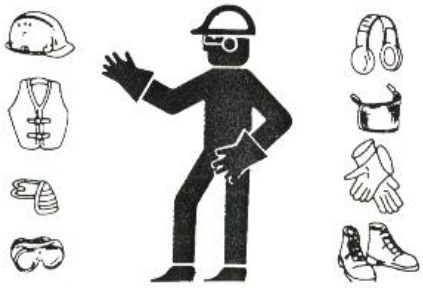

Wear close fitting clothes and safety equipment appropriate to the job.

Wear suitable hearing protective device as prolonged exposure to loud noise can cause impairment or loss of hearing.
Wear safety gloves when working with discs as they can have sharp edges.

Operating equipment safely requires the full attention of the operator. Do not wear radio headphones while operating machine.

BE SAFE WITH CHEMICALS

Direct exposure to agricultural and hazardous chemicals can cause serious injury. Potentially hazardous chemicals used with Aitchison equipment include such items as lubricants, coolants, fertilizer, paint and adhesives. If in doubt, contact your local Aitchison dealer for information about chemical safety and first aid procedures.
Keep a fire extinguisher and first aid kit handy

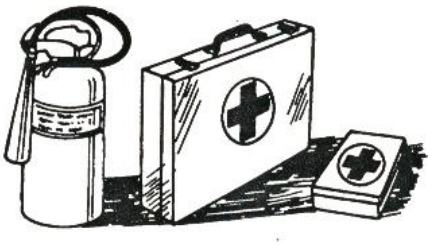

When disposing of chemicals, make sure hoppers are properly washed to get rid of any chemical residue and that any chemicals are disposed of in an approved manner. Follow instructions of chemical manufacturers for disposal methods.

USE SAFETY LIGHT AND DEVICES

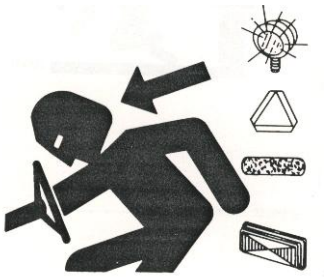

Slow moving tractors and equipment can create a hazard when driven on public roads. They are difficult to see, especially at night. This could lead to personal injury or death if a collision with a vehicle occurs.

Whenever driving on public roads, use flashing warning lights. Provide extra lighting at night on machine and tractor. An implement safety lighting kit is available from Aitchison Industries.

TRANSPORT SAFELY

Do not exceed transport speed for machine; see your local Aitchison dealer. Never transport at any speed, which does not permit adequate control of steering and stopping.
Reduce speed over rough ground

For safe transport, tractor must weigh more than machine.

REDUCE SPEED WHEN TOWING LOADS

Braking to stop towed loads from transport speeds can cause the towed load to swerve and upset. Reduce speed if towed load weighs more than the tractor and is not equipped with brakes.

Use additional caution when towing loads under adverse surface conditions, when turning and on lines.

PRACTICE SAFE MAINTENANCE

Understand service procedure before doing work. Keep area clean and dry.

Never lubricate, service or adjust machine while it is moving. Keep hands, feet and clothing from power driven parts. Disengage all power and operate controls to relieve pressure. Lower equipment to the ground. Allow machine to cool.

Securely support any machine elements that must be raised for service work.

Keep all parts in good condition and properly installed. Fix damage immediately. Replace worn or broken parts. Remove any buildup of grease, oil, or debris.

Remove paint before welding or heating. Avoid potentially toxic fumes and dust when sanding, repainting or welding. Do all work outside in a well-ventilated area. Dispose of paint and solvent properly.

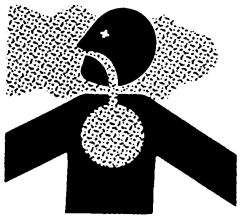

Avoid heating near pressurized fluid lines or other flammable materials. Pressurized lines can be accidentally cut when heat goes beyond the immediate flame, which could result in severe burns to yourself and bystanders.

Avoid high-pressure fluids. Escaping fluid under pressure can cause injury. Relieve pressure before disconnecting hydraulic or other lines.

DISPOSE OF WASTE PROPERLY

Improper disposing of waste can threaten the environment and ecology. Use leak-proof equipment when draining fluids. Do not use food or beverage containers that may mislead someone into drinking from them.

Do not pour waste onto the ground, down a drain, or into any water source. Use the manufactures directions on the correct way to recycle or dispose of waste.

4. ATTACHING YOUR SPREADER TO AN ATV

It is important to attach the spreader to the tow-ball on your ATV 4-wheel or 3-wheel motorcycle.

There is provision to ñevel upò the spreader drawbar so that the hopper is perpendicular. It should be slightly tilted forward so that the weight is loading the drawbar, but not so far forward as to cause the fertiliser to spill out.

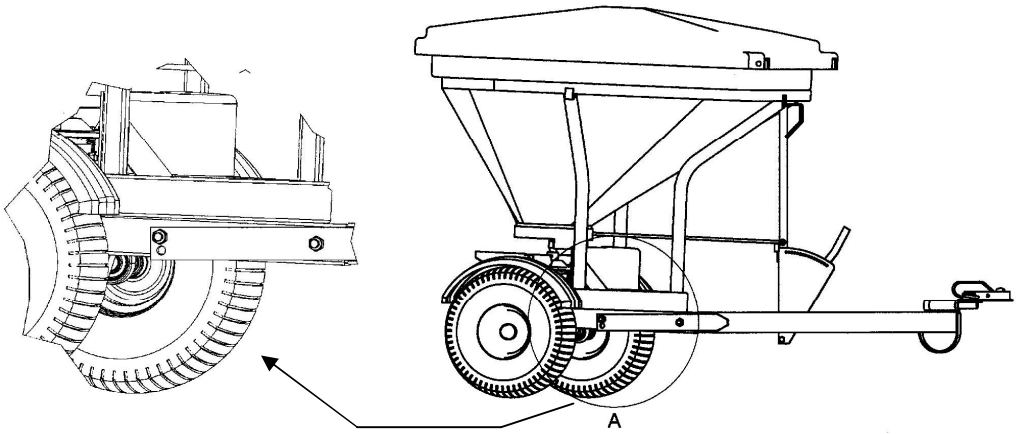

HOPPER LEVELLED UP BY ADJUSTING FORWARD SUPPORT ON DRAWBAR

5. ADJUSTING THE SPREADING RATE

The lever arm on the frame with the graduated index plate 1-8 (in 0.5 steps) gives an indication of the scale of the aperture openings

5.1. Aperture Setting Lever

The aperture opener on the Agri-Spred is controlled by the setting lever (A). To set aperture opener, pull the setting lever outwards against spring tension and then re-position to suit the hole required to dispense the desired rate of fertiliser seed.

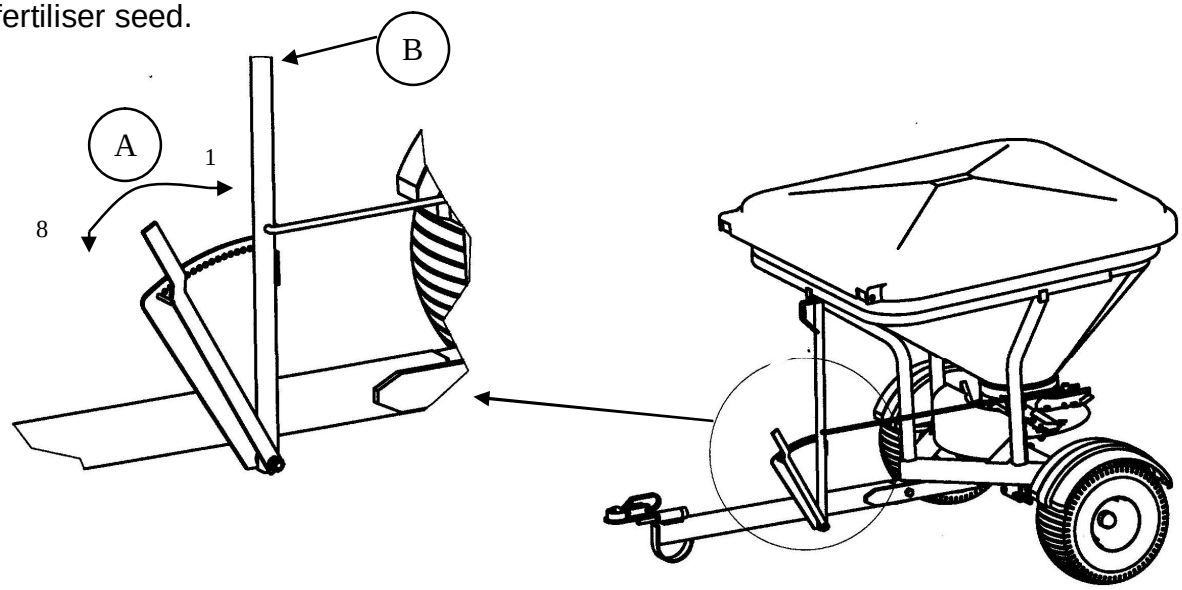

5.2. Operating Handle

If you are having problems reaching the operating handle (B) from your ATV, fashion up a piece of polythene pipe with a hole in one end, attach this end securely to the operating handle and you should now be able to adjust the handle from your A.T.V.

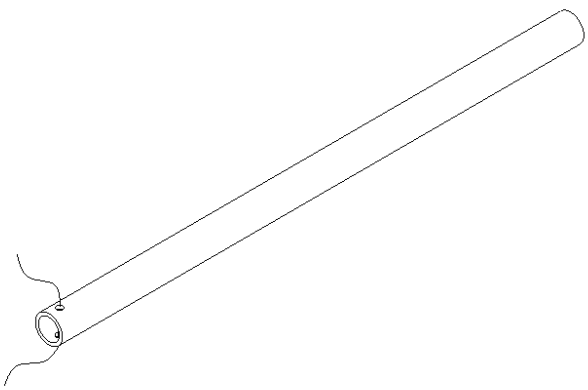

6. OTHER PECULIARITIES OF SPREADING

The sowing graphs in this book have been gained by careful calculations from accurate measurements using samples of seed and fertilisers. Changes in temperature and relative humidity in the atmosphere may cause variation in the flow characteristics of fertilisers. This means that the sowing densities of seeds, even of the same varieties, will slightly differ. Variations in speed of the A.T.V and inaccuracies in the speedometer will also cause the spreading rate to differ slightly from the sowing graphs. The recommended speed on the Calibration chart is for the Spreader to be towed at 15 kph. In practice this isnôt always possible, so the operator must take a lower speed into account when the conditions justify this. At a lower speed recalibration will be necessary.

6.1. Grain

Many farmers have found that by using the Agri-Spred instead of their combined grain and fertiliser drills, they are getting good results at a fraction of the cost.

If the Agri-Spred is used to distribute grain; roll the land before spreading, when spreading, and then after spreading. Cultivate the land to the required seed depth i.e. 50mm to 75mm.
Be aware that if the ground is too soft when distributing grain or seeds, the wheels will sink in further and cause uneven seed depths. This will be seen in the growing crop.

6.2. Grass Seeds

The rate of spread is affected considerably by the horns of hairs at the ends of Italian ryegrass. Most of the Italian varieties are usually very horny, although some samples are dehorned and sow very freely.
When separating mixtures, it must be noted that grass seeds must not be sown at a greater width than 12 feet. Agitation seems violent when mixtures of grasses and clovers are used but the small seeds do not fall to the bottom of the hopper through the grass seeds. As shown from samples taken at various stages, the fine seeds remain evenly mixed.

6.3. Small Seeds

The Agri-Spred can easily spread seeds such as rape and choumoullier. To sow small seeds, mix them with a quantity of fertiliser and use the spreading graph for fertiliser to calculate sowing rate.

6.4. Forward Speed of A.T.V

The A.T.V should be driven at a constant speed in a gear that does not require changing throughout the field.

6.5. Double Sowing

The system of double sowing helps compensate for inaccurate driving and variations in speed. With all grain and granular fertilisers, the extremity of the spread should just hit the previous wheel mark.

6.6. Width

The width of spread may be taken from the sowing graphs for the substance being sown. The ñbout widthò is the distance between the centre of the A.T.V. and the centre of its last wheel mark. There will be very little visible difference in the crop if there is a slight variation of bout widths.

6.7. Engaging 'R' Clutch

When you are ready to spread Fertiliser, slowly roll the ATV and spreader forward. At the same time release the clutch handle from its lock out position, the spring will pull the Dog Clutch into use. The slower that your ATV is moving forward, the better (**Note: must not be more than 5km/hr**). This gives the clutch the opportunity to slide into work without any sudden loads being placed on it.

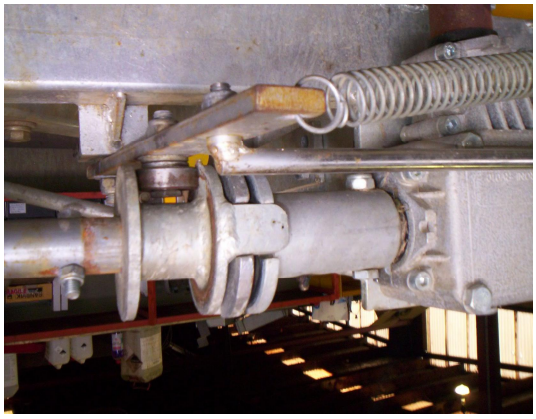

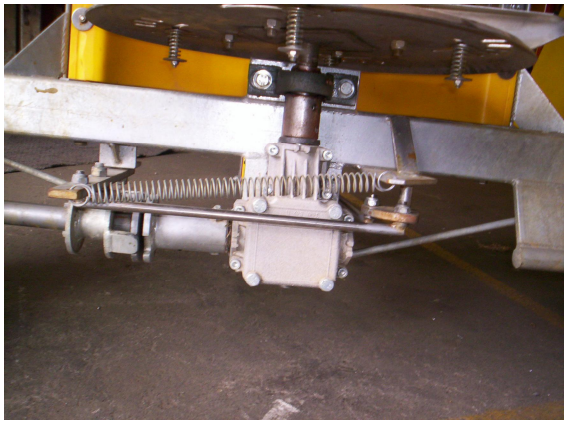

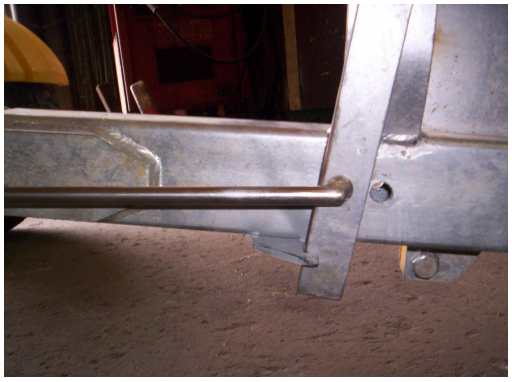

6.8. Fertiliser settling

With some types of fertiliser, transportation of the spreader for long distances before engaging the clutch may cause the fertiliser to settle and totally immobilise the agitator. This in turn will cause the tyre to skid.

To overcome this problem it is necessary to ease the density of the fertiliser around the agitator. To clear this problem, simply open the aperture vent slightly and let out a small quantity of fertiliser. By rolling forward while on the ATV and easing the clutch into the drive position the opposing lugs on the clutch will line up and the wheel is in the drive position.

Distributing Fertiliser and/or Seed

6.9. Driving clockwise/anticlockwise around the field.

Driving around the field is recommended, as it tends to even out errors while spreading. If there are windy conditions, always drive around the field rather than to-and-fro.

6.10. Driving 'To-and-Fro' across the field

Make sure the arc control fins illustrated on the next page are set to sow evenly on both sides when driving to-and-fro the field. Using this method will double any slight inaccuracies in the setting of the machine. If necessary, the evenness of spread may be checked by spreading a small quantity on concrete and weighing the amounts on either side.

6.11. Repositioning the Spinning Disc Fins for an Even Spread

Adjust fins below as shown below to compensate for spreading irregularities.

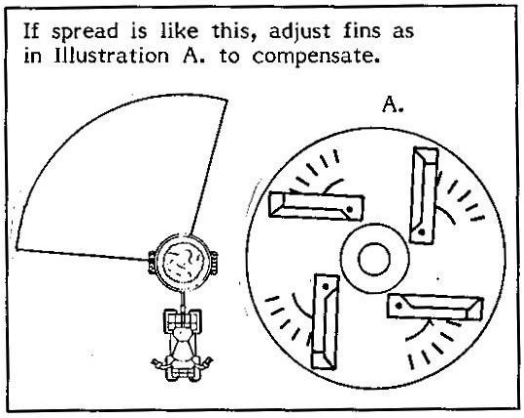

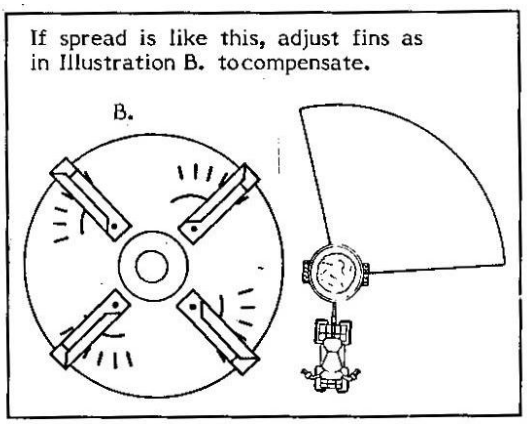

Under normal spreading conditions in an open field, adjustments may be made as required. According to the type of product being used, move the fins on the disc manually so they operate either further forward or further back.

Correct spreading is achieved when the spreader distributes fertiliser evenly at a density gradually decreasing from the centre towards the sides, giving more or less symmetrical distribution. However the nature of the terrain or differences in fertiliser weight and of the various grains and seeds can cause some variations in spreading symmetry. The disc system is specifically designed so that, starting from the centre of the hopper; broadcasting distance and quantity spread are the same on each side of the tractor, and in an even pattern as described above.
To improve the evenness of the cover, the extreme edges of the spreading area should overlap on successive bouts.

To adjust spreader fins, raise spring loaded fins to new position.

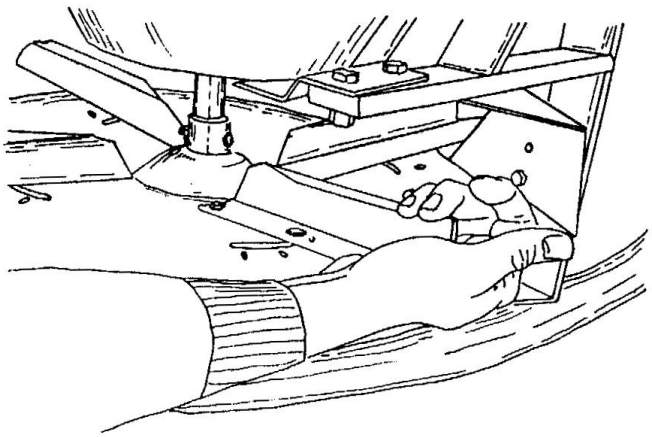

7. MAINTENANCE

7.1. Right Angled Gearbox

The right-angled gearbox was pre-filled at the factory, but will need checking occasionally. To find the right level to fill the oil to, turn the spreader onto its side. The oil level is determined by filling the oil to the plug level.

Use only ST90 type oil and change the gearbox oil after 30 hours of use and thereafter every 50 hours.

7.2. Removal of Hopper

If repairs or maintenance are required to the mechanism of the spreader and you feel that it is necessary to remove the hopper; then remove the agitator by undoing the nut and bolt securing it. Then simply remove the nuts and washers that locate the polyurethane hopper.

7.3. Wheel Bearings

Bearings in the wheel assembly will need to be packed with grease from time to time.

7.4. Lubrication of Clutch Bush

It is important to grease the bush that overlays the drive axle. Greasing this locality ensures that any fertiliser that may be dispersed here will be ejected. Greasing ensures that fertiliser will not penetrate the bush shaft.

7.5. Cleaning after Use

The entire machine should be water blasted after use, particularly the aperture at the base of the hopper. Any fertiliser left here will lead to corrosion and rapid degeneration of the machine. Having washed the machine thoroughly and removed all fertiliser traces, it is then necessary to leave the machine to dry for a day, or dry it with compressed air supply.
Once dry, use a paintbrush or spray can to cover all moving parts with a liberal dressing of oil.

After cleaning the spinning disc, ensure that there is no trace of fertiliser caked on it. If wear appears to be taking place, it could upset the balance, so the disc should be removed and replaced.

8. SEED SPREADING GUIDE

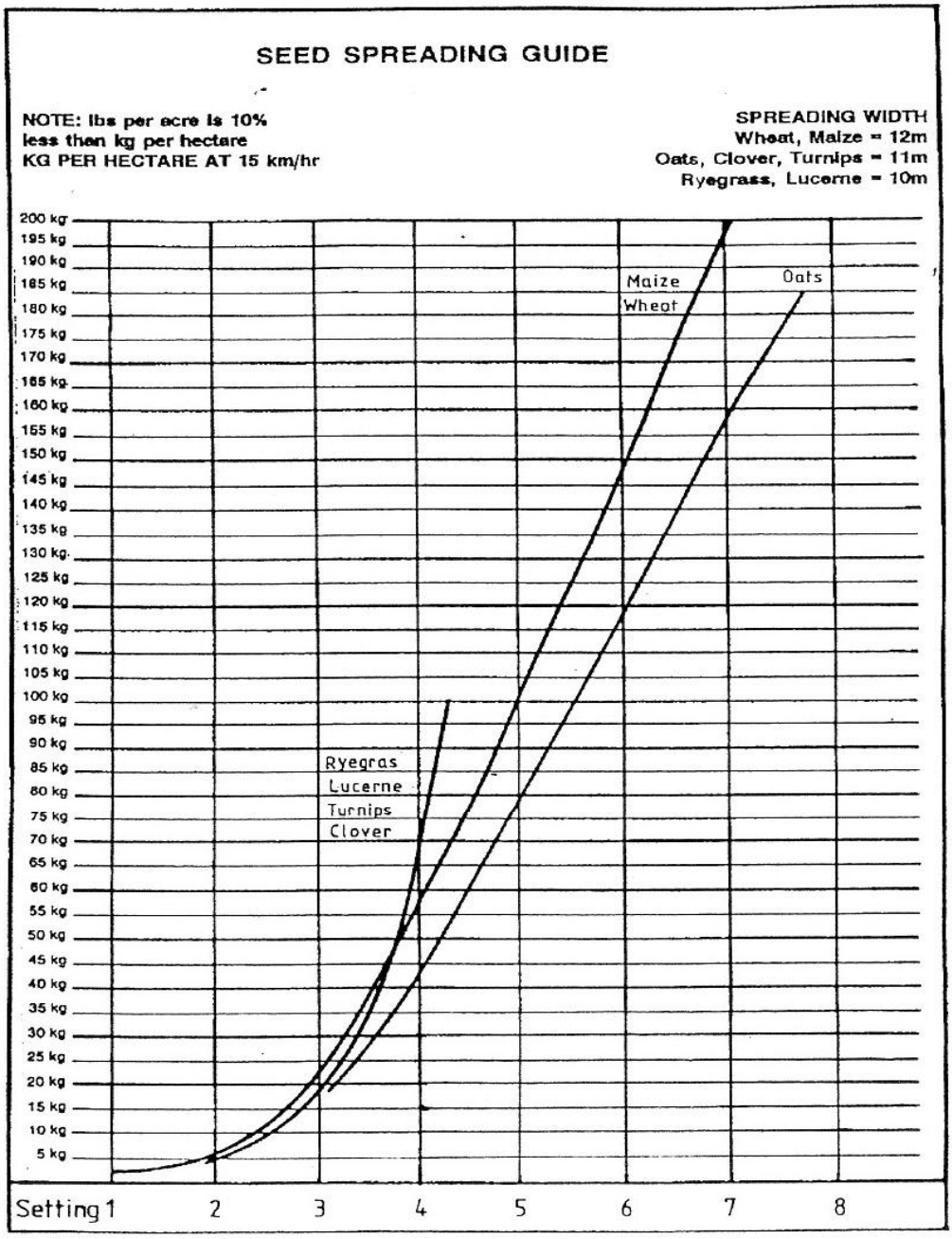

To spread at speeds other than 15 km/hr:
For every km/hr over or under 15km/hr, multiply by 6.6 to find a percentage to add or subtract, for example:

Urea spread at 70 kg/ha at 15 km/hr equals setting of 3 ½ approx
10 km/hr equals setting of 2 ½ approx
18 km/hr equals setting of 4 approx

Calculations are as follows:

1) 70 at 10 equals difference of minus 5. 5 x 6.6 = 33. Multiply 70 x 33% equals 23.1. Deduct 23.1 from 70 = 47kg/ha which equals setting 2 ½
2) 70 at 18 equals difference of plus 3. 3 x 6.6 = 19.8. Multiply 70 x 19.8% equals 13.86. Add 14 to 70 = 84 kg/ha which equals setting 4.

THESE SPREADING GUIDES ARE A *GUIDE* ONLY
Operators should calibrate to ensure correct application rate

9.FERTILISER SPREADING GUIDE

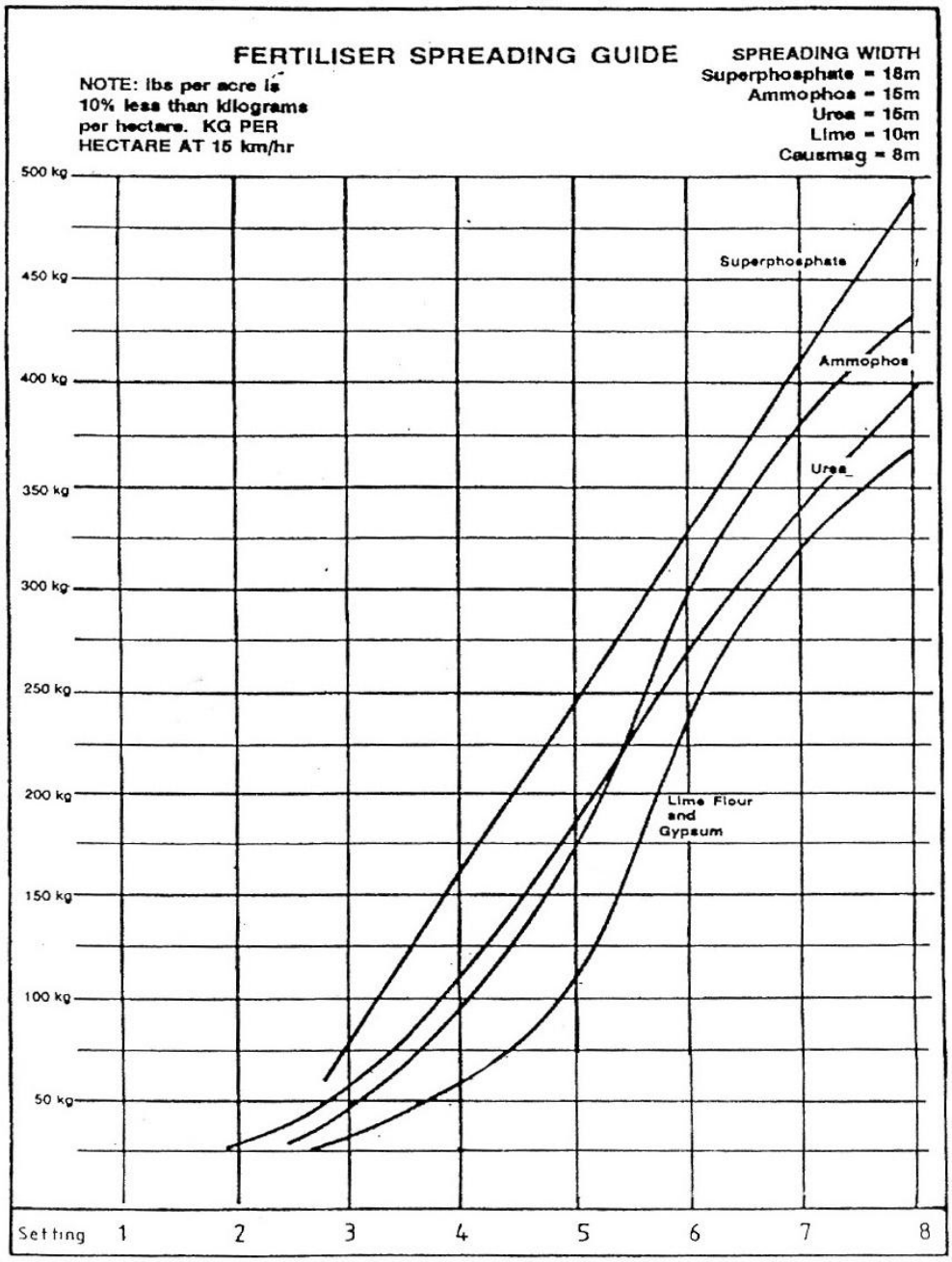

To spread at speeds other than 15 km/hr:
For every km/hr over or under 15km/hr, multiply by 6.6 to find a percentage to add or subtract, for example:

Urea spread at 70 kg/ha at 15 km/hr equals setting of 3 ½ approx
10 km/hr equals setting of 2 ½ approx
18 km/hr equals setting of 4 approx

Calculations are as follows:

1) 70 at 10 equals difference of minus 5. 5 x 6.6 = 33. Multiply 70 x 33% equals 23.1. Deduct 23.1 from 70 = 47kg/ha which equals setting 2 ½
2) 70 at 18 equals difference of plus 3. 3 x 6.6 = 19.8. Multiply 70 x 19.8% equals 13.86. Add 14 to 70 = 84 kg/ha which equals setting 4.

THESE SPREADING GUIDES ARE A *GUIDE* ONLY
Operators should calibrate to ensure correct application rate

10. SEED AND FERTILISER SPREADING GUIDE (Approx 15 km/hr)

WHEAT Spreading Width: 12m							
Kg/ha	50	75	100	125	150	175	200
Setting:	4	4.5	5	5.5	6	6.5	7

RYEGRASS Spreading Width: 10m							
Kg/ha	5	10	15	20	25	30	35
Setting:	2	2.5	3	3.5	4	4.5	5

UREA/DAP Spreading Width: 15m								
Kg/ha	25	50	75	100	150	200	250	300
Setting:	2	3	3.5	4	4.5	5	5.5	6.5

SUPERPHOSPHATE Spreading Width: 18m								
Kg/ha	50	75	100	150	200	250	300	350
Setting:	2.5	3	3.5	4	4.5	5	5.5	6.5

CAUSMAG Spreading Width: 8m				
Kg/ha	2	5	10	15
Setting:	1.5	2.5	3	3.5

11. TRAILED SPREADER – PARTS LIST

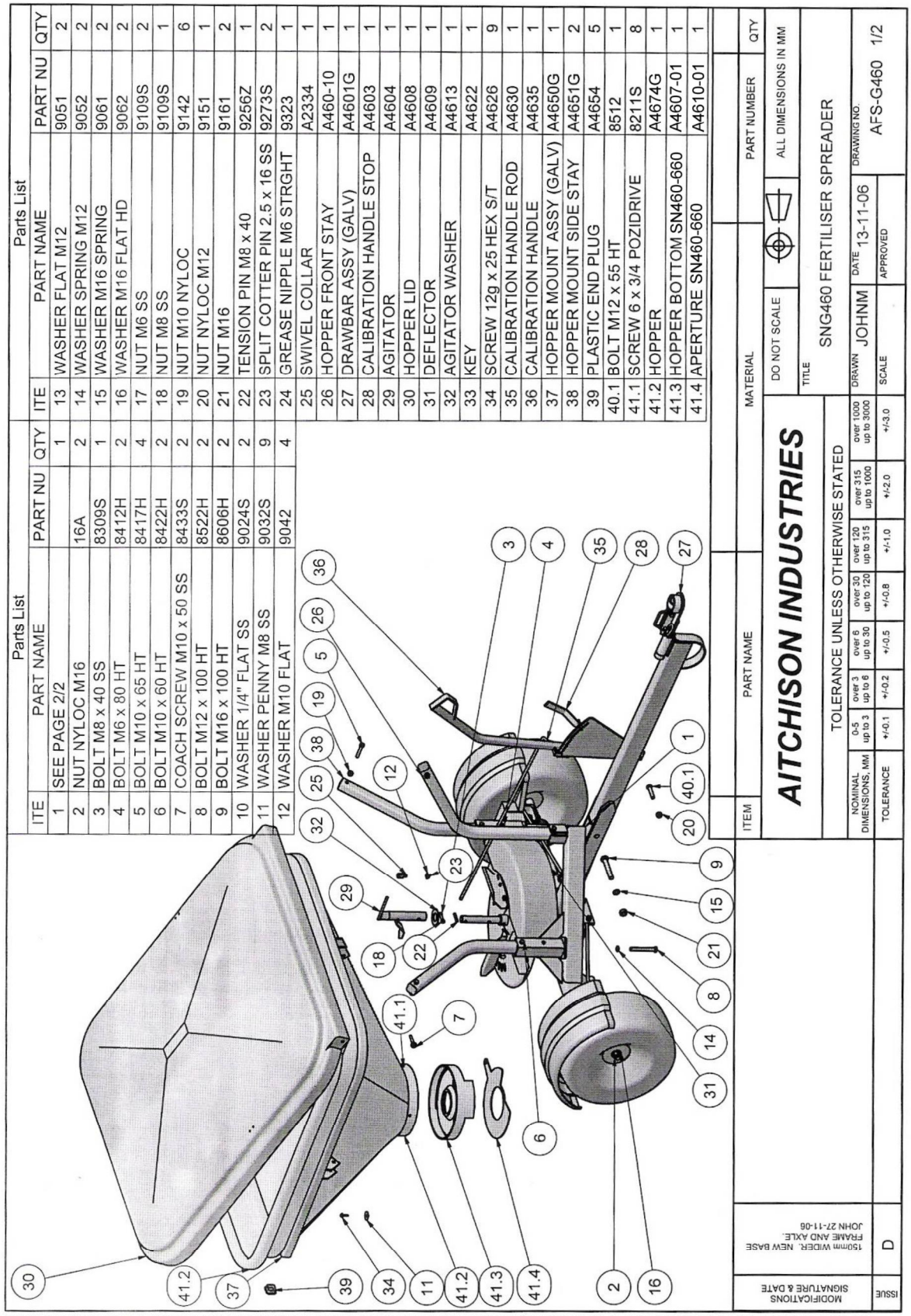

12. TRAILED SPREADER – PARTS LIST

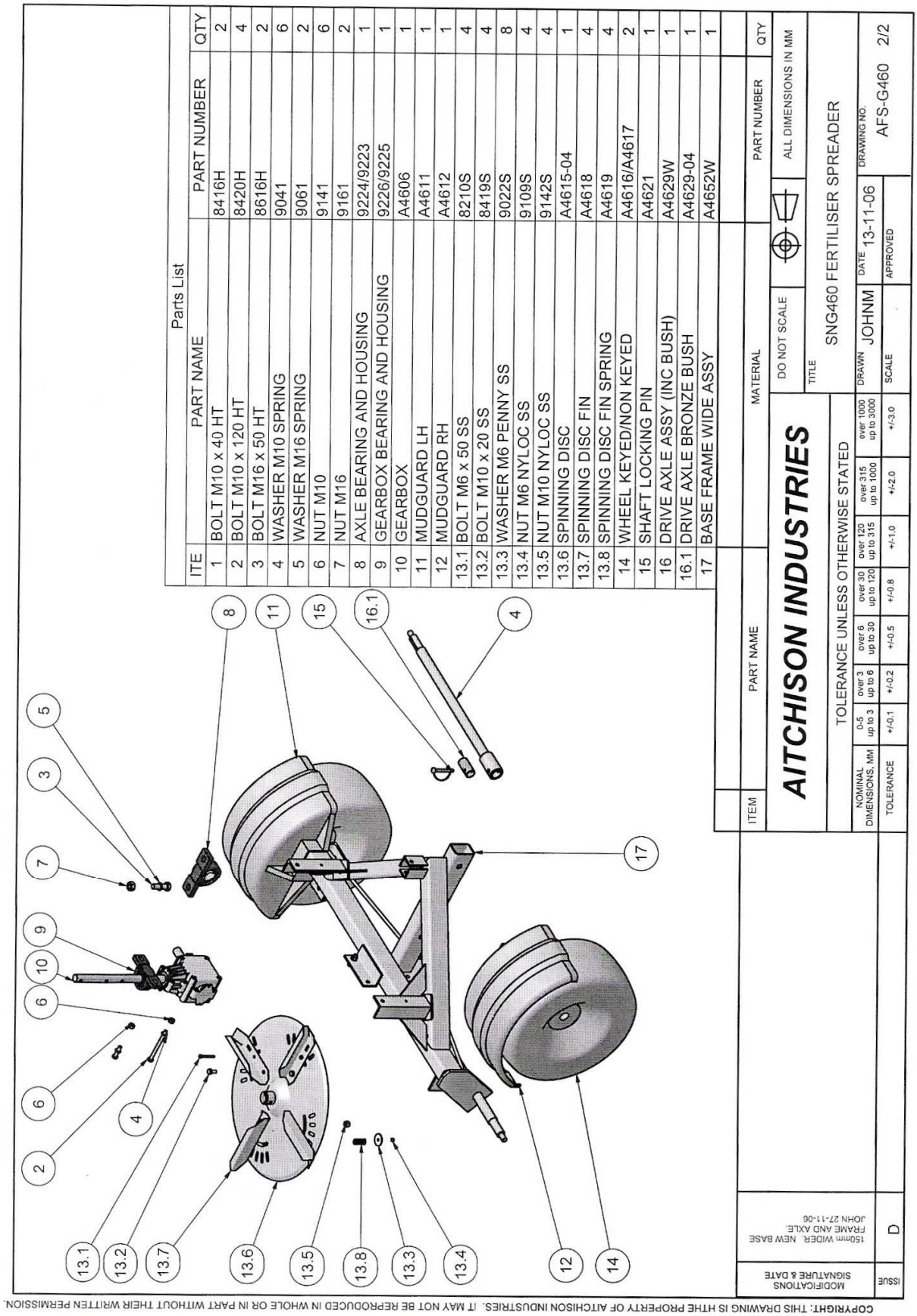

13. CLUTCH ASSEMBLY

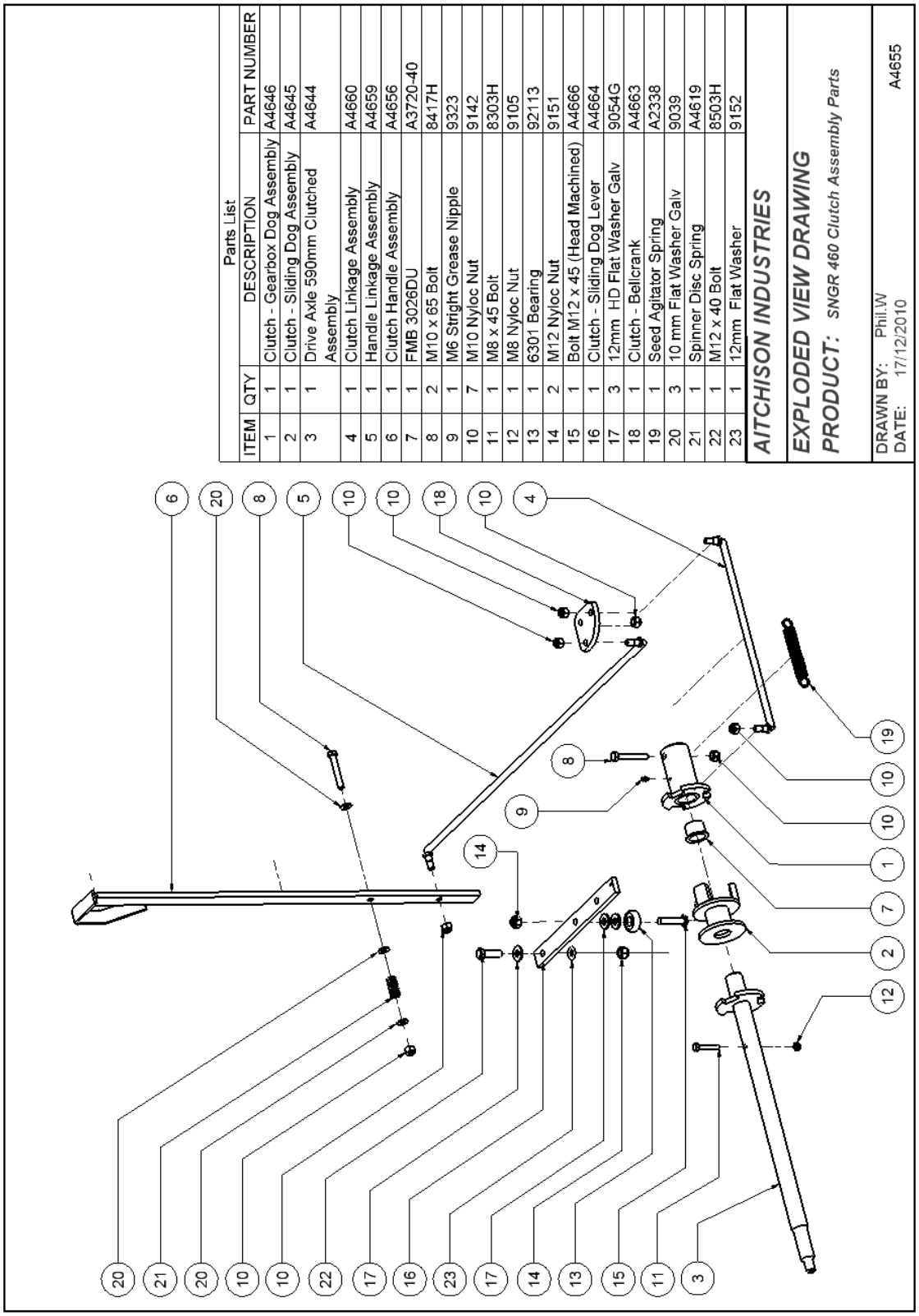

Parts List

ITEM	QTY	DESCRIPTION	PART NUMBER
1	1	Clutch - Gearbox Dog Assembly	A4646
2	1	Clutch - Sliding Dog Assembly	A4645
3	1	Drive Axle 590mm Clutched Assembly	A4644
4	1	Clutch Linkage Assembly	A4660
5	1	Handle Linkage Assembly	A4659
6	1	Clutch Handle Assembly	A4656
7	1	FMB 3026DU	A3720-40
8	2	M10 x 65 Bolt	8417H
9	1	M6 Stright Grease Nipple	9323
10	7	M10 Nyloc Nut	9142
11	1	M8 x 45 Bolt	8303H
12	1	M8 Nyloc Nut	9105
13	1	6301 Bearing	92113
14	2	M12 Nyloc Nut	9151
15	1	Bolt M12 x 45 (Head Machined)	A4666
16	1	Clutch - Sliding Dog Lever	A4664
17	3	12mm HD Flat Washer Galv	9054G
18	1	Clutch - Bellcrank	A4663
19	1	Seed Agitator Spring	A2338
20	3	10 mm Flat Washer Galv	9039
21	1	Spinner Disc Spring	A4619
22	1	M12 x 40 Bolt	8503H
23	1	12mm Flat Washer	9152

AITCHISON INDUSTRIES

EXPLODED VIEW DRAWING

PRODUCT: SNGR 460 Clutch Assembly Parts

DRAWN BY: Phil.W
DATE: 17/12/2010

A4655